ISSN (Print) : 2320 – 3765
ISSN (Online): 2278 – 8875

International Journal of Advanced Research in Electrical, Electronics and Instrumentation Engineering

An ISO 3297: 2007 Certified Organization Volume 8, Special Issue 1, March 2019

A Two Days National Conference on Emerging Trends in Electronic and Instrumentation Engineering (NCETEIE 19)

12th & 13th March 2k19

Organized by

Department of Electronics and Instrumentation Engineering, Adhiyamaan College of Engineering, Hosur, Tamilnadu, India

Detection of Calcium Carbide Based Ripeness in Mango Fruit

Bagyalakshmi.N[1] , Gokul.M[2], Sankaraiya.R[3]

Associate Professor, Department of EIE, Adhiyamaan College of Engineering, Hosur, Tamilnadu, India[1]

UG Student, Department of EIE, Adhiyamaan College of Engineering, Hosur, Tamilnadu, India [2,3]

ABSTRACT: Mango is an important fruit crop across world. Now days to ripe mangoes, Traders use many artificial methods(using chemicals).One of the artificial methods used is adding of calcium carbide.CaC_2 contains the traces of arsenic and phosphorous which is the carcinogenic agent. The threshold based segmentation is used to segment the image from the bunch of mangoes and some discriminatory features are extracted in frequency domain using Haar filter. The variation in the features of the images is related to the difference between artificially ripened and naturally ripened mangoes. This statistical features are then analysed for identification of artificially ripened sample this samples using vector machine classifier. This results are given to microcontroller arrangement which intimates end user via IoT and alert the processing centre. The experimental results indicate that the proposed method is efficient for identification of artificially ripened mangoes.

KEYWORDS: CaC_2 (Calcium carbide), Haar Filter.

I.INTRODUCTION

In India the ever Increasing population, losses in handling and processing and the Increased expectation of fruits products of high quality and safety standards there is a need for the growth of accurate fast and objective quality determination of agricultural products. Agriculture sector plays a key role in the economic development of India. The national fruit of India is mango, In Tamilnadu, krishnagiri District is the first place in the mango. Almost 20% of the mango varieties like 'safeda' or 'banganapalli' and 'Neelam' that are produced in the district. fruit is grown as it has many vitamins and necessary nutrients for human bodies[1]. Unripe fruits often contains various types of organic acids ,namely citric acid, malic acid, ascorbic acid, formic acid, tartaric acid etc. These acids are responsible for the sour tastes of fruits[2]. In fruit ripening process chlorophyll is produced and same time decomposed. There is a great demand high quality fruits in the market. fruit ripen in the presence of ethylene gas($C2H_4$)Calcium Carbide reacts with water if produces Acetylene($C2H_2$) which behave similar to ethylene gas. Calcium Carbide contains the traces of arsenic and phosphorous which as carcinogenic agent is due to the fact that it is possibly carcinogenic although it has not been tested for its carcinogenicity[3]. however acetylene by itself is not extremely hazardous as claimed by some website saying welding gas .the external colour and the texture are usually taken under consideration when it comes to choose right fruits. the naturally ripen fruits often uneven in colour.[4].In past many research work has been carried for detecting, localizing & counting of on tree fruit by implementing KNN, SVM, ANN & texture analysis. It is easily detected fruit but sometimes the problem is occurs due to overlapping, shape or colour.[5]. Many types of colour model are present like RGB, L*a*b, CMYK, HSV, YCb Cr. Detecting shape and estimating volume is one of the important aspects of research which help to grade fruit.[6] .Using MATLAB Software as a tool image processing we can find the ripening of mangoes using various algorithm. finally the collection of trained input data images we have proposed certain range. With these ranges we can identify the ripening of mangoes wether artificially or naturally.[7].

ISSN (Print) : 2320 – 3765
ISSN (Online): 2278 – 8875

International Journal of Advanced Research in Electrical, Electronics and Instrumentation Engineering

An ISO 3297: 2007 Certified Organization Volume 8, Special Issue 1, March 2019

A Two Days National Conference on Emerging Trends in Electronic and Instrumentation Engineering (NCETEIE 19)

12th & 13th March 2k19

Organized by

Department of Electronics and Instrumentation Engineering, Adhiyamaan College of Engineering, Hosur, Tamilnadu, India

II.PROPOSED METHODOLOGY

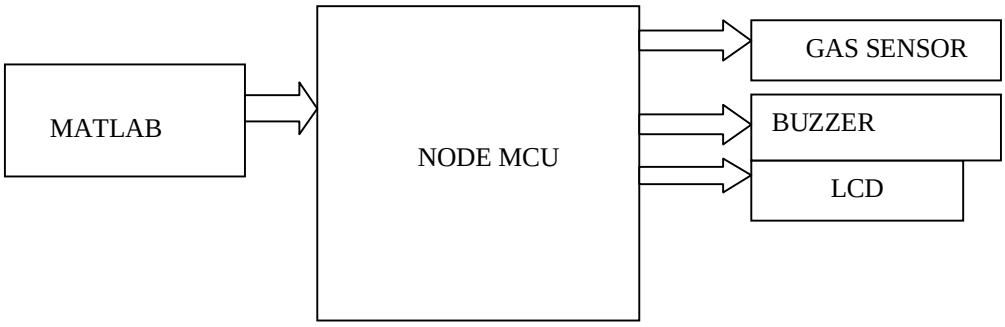

Fig.2.1 block diagram

III. HARDWARE DESCRIPITION

The Node Mcu is an open-source firmware and development kit that helps to prototype for IoT product with few Lua script lines. The Development Kit based oni ntegates GPIO, PWM, IIC, 1-Wire and ADC all in one board.The ESP8266 is the name of a micro controller designed by Espressif Systems. It is an open source IoT platform. It includes firmware which runs on Wi-Fi SoC from Espressif Systems, and hardware which is based on the ESP-12 module.The term "NodeMCU" by default refers to the firmware quite than the dev kits. The firmware uses the Lua scripting language. It is based on the eLua project, and build on the Espressif Non-OS SDK for ESP8266.

LCD is a type of display used in digital watches and lots of portable computers. LCD displays utilize to sheets of polarizing material among a liquid crystal solution between them. An electric current passed from end to end the liquid causes the crystals to align so that light cannot pass through them. LCD technology has advanced incredibly rapidly since its initial inception over a decade ago for use in lap top computers. Technical achievements have resulted in brighter displace, higher resolutions, reduce response times and cheaper manufacturing process. The liquid crystals container be manipulated through an applied electric voltage so that light is allowed to pass or is blocked. By carefully controlling somewhere and what wavelength (colour) of light is allowed to pass, the LCD monitor is able to display images. A backlight provides LCD monitor's brightness.

This gas sensor mq2 detects the presence of combustible gas at concentrations from 300 to 10,000 ppm. The sensor's simple analog voltage interface requires only one analog input pin from microcontroller. This flammable gas sensor detects the concentrations of combustible gas in the air and ouputs its reading as an analog voltageThe sensor can operate at temperatures from -20 to 50°C and consume a reduced amount of than 150 mA at 5 V.

Buzzer is an electrical device which makes sound. In this project when mango is artificially or natural in detected buzzer will turn on. the volume of the Buzzer container be manually adjusted so that you can create the correct volume for the area. This ensures so as to the proper volume level is achieved for a particular area.

IV.SOFTWARE DESCRIPTION

An MATLAB tool box used in image analysed it is clicked then the user is given tools to discard that the considers noise the image acquisition is done using a digital camera and it is loaded and saving using MIL software MIL works with images captured from any type of colour (RGB) or monochrome source(gray)[8].MIL supports the saving and loading of images. It supports file format such as TIF(TIFF),JPG(JPEG),BMP(bitmap)as well as raw format, the input image got is an RGB image. Basically the images which are obtained during image acquisition may not be directly suitable for identification and classification purpose because of some factors such as noise, weather condition and poor resolution of an images and unwanted back ground etc. The steps involved in pre-processing are, A. Input image, B. Back ground subtractions, C. Converting RGB to gray, D. Converting gray to binary, E. Filtering.

ISSN (Print) : 2320 – 3765
ISSN (Online): 2278 – 8875

International Journal of Advanced Research in Electrical, Electronics and Instrumentation Engineering

An ISO 3297: 2007 Certified Organization Volume 8, Special Issue 1, March 2019

A Two Days National Conference on Emerging Trends in Electronic and Instrumentation Engineering (NCETEIE 19)

12th & 13th March 2k19

Organized by

Department of Electronics and Instrumentation Engineering, Adhiyamaan College of Engineering, Hosur, Tamilnadu, India

RGB is the formats of colour images. the input image is represented by three matrices of size regarding the image format. the three matrices in each image corresponding to the colours red, green and blue (RGB) primaries in linear intensity encoding by gamma equation. A binary image is which has two assigned fixed values typically the two colours used for a binary image are black converted to binary image this means that each pixel is stored as a single bit(0 or 1) binary images used in digital image processing as masks or as the result of some frequent operations such as segmentation for thresholding and dithering[9].

The purpose of filtering is to smooth the image reduce noise and improve the visual quality of the image often smoothing is referred to as filtering here filtering is carried out by radian filter size it is very useful in detecting edges. he best known order statistics filter is the median filter which replace the value of fixed by the median of the gray levels in the neighbourhood of that pixel . the original value of the pixel is include in the computation of the median. The Median filtering is very widely used in digital image processing because, under certain conditions, it preserves edges while removing noise (but see discussion below), also having applications in signal processing. The median value is not affected by the actual value of the noise cells the median filter is particularly good at removing isolated random noise, as in this example[3][4][5]. It also pressure edges and line features belted than the low pass average filter, but does produce some blurring.

The purpose of image segmentation is to divide an image into meaningful region with respect to a particular application . The segmentation is based on measurement taken from image , may be gray level colour texture , depth or motion[10]. edged detection is a fundamental step in image processing it is necessary to point out the edges to get the best result from maturing process. Feature extraction is defined as group of the input data objects into a set of features the features extracted carefully will help to extract the relevant information from the input data in order to perform the feature matching using this we can be reduce the representation input size[11]. The clustering process has been used to extract features. Feature training method includes collection of large number of trained features of clustered values of naturally and artificially mangoes. Many number of collecting trained features gives more accuracy . in this method, the number of doest code vectors for each training vector are corresponding cluster density[12].The cluster densities for all training vector are computed and are sorted in descending order from the sorted list the top M training vectors with higher cluster densities are identified and grouped as code book this code book is saved and loaded in MATLAB for feature matching.

Feature matching methods essentially consist of identifying features in images that can be matched with corresponding features in the image from which a transformation model can be estimated. feature matching is an important task in the area of image processing here correlation method is used for features matching here the clustered values of naturally and artificially mangoes are taken more in number. With the extracted features each value are core related with one another and we get a specific value for naturally and artificially mangoes.

V.RESULT AND DISCUSSION

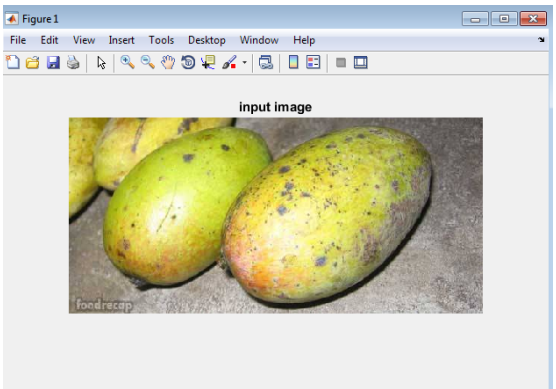

Fig 5.1 Input image

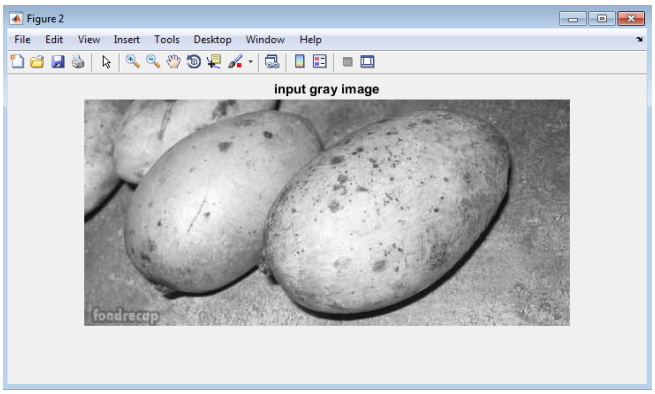

Fig 5.2 Input gray image

ISSN (Print) : 2320 – 3765
ISSN (Online): 2278 – 8875

International Journal of Advanced Research in Electrical, Electronics and Instrumentation Engineering

An ISO 3297: 2007 Certified Organization Volume 8, Special Issue 1, March 2019

A Two Days National Conference on Emerging Trends in Electronic and Instrumentation Engineering (NCETEIE 19)

12th & 13th March 2k19

Organized by

Department of Electronics and Instrumentation Engineering, Adhiyamaan College of Engineering, Hosur, Tamilnadu, India

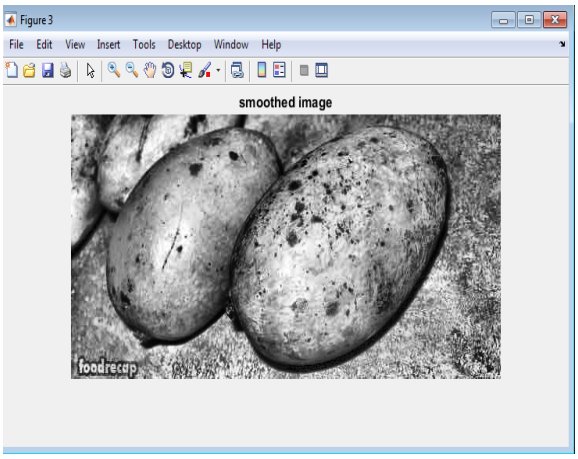

Fig 5.3 Smoothed image

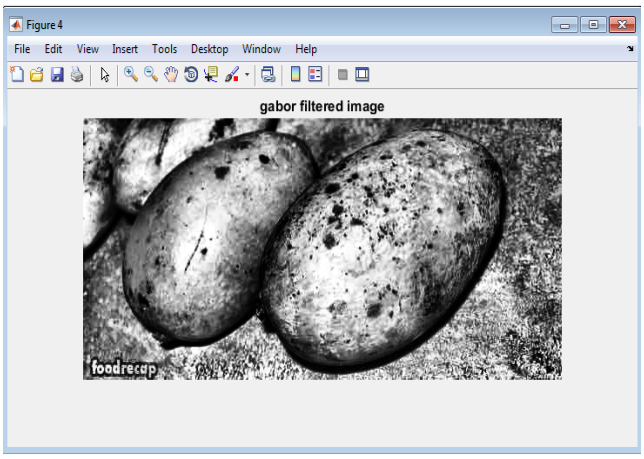

Fig 5.4 Gabor filtered image

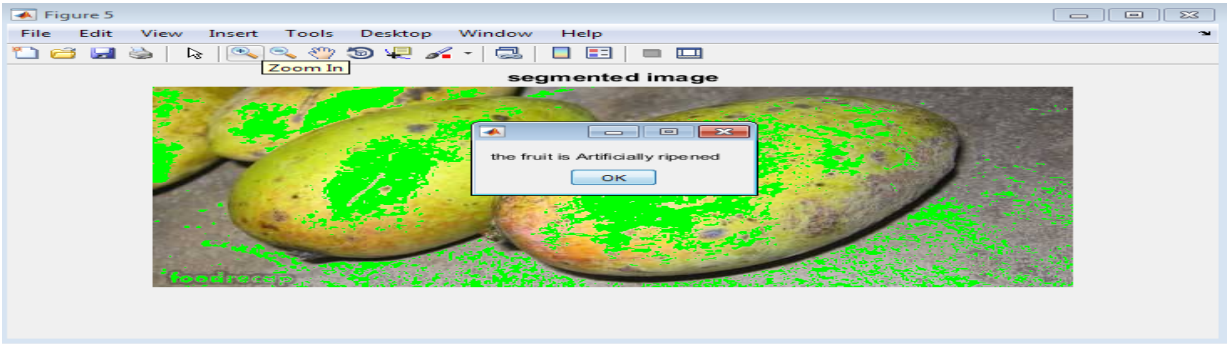

Fig 5.5 Segmented image

A gray scale (or gray level) image is simply one in which the only colours are shades of gray. such images from any other sort of colour image is that low information needs to be provided for each pixel. In `gray' colour is one in which the red, green and blue components all have equal intensity in RGB space, and so it is only necessary to specify for a single intensity value in each pixel, as opposed to the three intensities needed to specify each pixel in a full colour image.

Smoothing image is often used to reduce noise within an image or to produce a less pixel image. Most smoothed methods are based on low pass filters. See Low Pass Filtering for more information. Smoothed is also usually for based on a single value representing the image, such as the average value of the image or the middle (median) value.

Gabor filters images are band pass filters which are used in image processing for feature extraction, texture analysis , and stereo disparity estimation . The impulse response of these filters is created by multiplying an Gaussian envelope function this is a complex oscillation. these elementary functions minimize the space (time)-uncertainty product. By extending these functions to two dimensions it is possible to create filters which are selective for orientation . Under certain conditions for the phase of response for filters is approximately linear. This property is exploited by stereo approaches here use the phase-difference for the left and right filter responses to estimate the disparity in the stereo data images . by several researchers that the profile of simple-cell receptive fields in the mammalian cortex can by described by oriented two-dimensional functions .

Segmentation image into distinct regions containing each pixels with similar attributes. The meaningful and useful for image analysis and interpretation, the regions should strongly relate to depicted objects or features of interest. Meaningful segmentation is the first step for low-level image processing transforming a grey scale or colour image into one or more other images to high-level image description in terms of features, objects, and scenes. The image analysis

depends on reliability for the segmentation, but an accurate partitioning of an image is generally a very challenging problem.

VII.CONCLUSION

Some countries use Calcium carbide for artificially ripening of mangoes . after calcium carbide comes in contact with moisture, it produces acetylene gas, which is quite similar in reaction to the natural ripening agent ethylene. Acetylene acts similar to ethylene and accelerates the ripening process. Industrial-grade calcium carbide could also include traces of arsenic and phosphorus which makes it a human health concern hence, the use of this chemical for this purpose is illegal in most countries since, it is extremely hazardous to the human body. identification of artificially and naturally based on ripening in image processing using MATLAB is successfully done with 80% accuracy. The use of image processing for identifying the ripening can be applied not only to mango can also apply this method to identify ripening of fruits with more accuracy. Thus the will enable the technology to be applied in many products.

REFERENCES

1.Anil K. Jain, Robert P.W. Duin, and Jianchang Mao, “Statistical Pattern Recognition: A Review”IEEE Transactions On Pattern Analysis And Machine Intelligence, Vol. 22, No. 1, January 2010.
2.A. K. Jain, “Fundamentals of Digital Image Processing” Prentice Hall of India, First Edition,1989.
3. Nelson SO, Bartley JPG. Frequency and temperature dependence of the dielectric properties of food materials. Transactions of the American Society of Agricultural Engineers. 2002; 45(4):1223–1227.
4. Sujatha K, Kumaresan M, Ponmagal RS, Vidhushini P. Vision based Automation for Flame image Analysis in Power Station Boilers. Australian Journal of Basic and Applied Sciences. 2015; 9(2):40-45.
5.Hongshe Dang, Jinguo Song, Qin Guo, "A Fruit Size Detecting and Grading System Based on Image Processing", 2010 Second International Conference on Intelligent Human-Machine Systems and Cybernetics, vol. 2, pp. 83-86, August 2010.
6.XuQiabao, ZouXiaobo, and Zhao Jiewen, "On-Line Detection of Defects on Fruit by Machinevision Systems Based on ThreeColor-Cameras Systems," Computer and Computing Technologies in Agriculture II, vol. 3, pp. 2231-2238, 2009.
7.GuoFeng and Cao Qixin,” Study on Color Image Processing Based Intelligent Fruit Sorting System”, Proceedings of the 5" World Congress on Intelligent Control and Automation, pp. 4802-4805, June 15-19, 2004.
8.ZouXiaobo, Zhao Jiewen, and Li Yanxiao, "Apple color grading based on organization feature parameters," Pattern Recognition Letters, vol. 28, pp. 2046-2053, June 2007.
9. Mohan.V, Shanmugapriya.P, Dr.Y.Venkataramani, “Object Recognition Using Image Descriptors”, Proceedings of the 2008 International Conference on Computing, Communication and Networking (ICCCN 2008).
10. Ms.Chinki Chandhok et al.,” An Approach to Image Segmentation using K-means Clustering Algorithm”, International Journal of Information Technology (IJIT), Volume – 1, Issue – 1, August 2012.
11.Gajanand Gupta ,’’Algorithm for Image Processing Using Improved Median Filter and Comparison of Mean, Median and Improved Median Filter”, International Journal of Soft Computing and Engineering(IJSCE)ISSN:2231- 2307,volume-1,Issue-5,November 2011.
12.Teoh CC, Mohd Syaifudin AR. Image processing and analysis techniques for estimating weight of Chokanan mangos. J Trop Agric Food Sci 2007;35:183–90.
13. S. Singal, M. Kumud and S. Thakral, Application of apple as ripening agent for banana, Indian Journal of Natural Products and Resources, 3 (2012), no. 1, 61-64.
14.O.E. Orisakwe, J.K. Nduka, C.N. Amadi, D.O. Dike and O. Bede, Heavy metals health risk assessment for population via consumption of food crops and fruits in Owerri, South Eastern Nigeria, Chemistry Central, 6 (2012), no. 1, 1-7.
15. Payne, A.B.; Walsh, K.B.; Subedi, P.P.; Jarvis, D. icultuEstimation of mango crop yield using image analysis – Segmentation method. Computers and Electronics in Agrre 2013, 91, 57–64.
16.ubero, S.; Diago, M.P.; Blasco, J.; Tardáguila, J.; Millán, B.; Aleixos, N. A new method for pedicel/peduncle detection and size assessment of grapevine berries and other fruits by image analysis. Biosystems Engineering 2014, 117, 62-72.
17.Bramley, P., 2002. Regulation of carotenoid formation during tomato fruit ripening and development. Journal of Experimental.
18 Zhang, D.; Lee, D.; Tippetts, B.J.; Lillywhite, K.D. Date maturity and quality evaluation using color distribution analysis and back projection. Journal of Food Engineering 2014, 131, 161–169.
19. Fadilah, N.; Mohamad-Saleh, J.; Abdul Halim, Z.; Ibrahim, H.; Syed Ali, S.S. Intelligent Color Vision System for Ripeness Classification of Oil Palm Fresh Fruit Bunch. Sensors 2012, 12, 14179–14195.
20. M. Kendrick, The Origin of Fruit Ripening, in Scientific AmericanTM. Nature America, Inc.: New York.Homepage: www.scientificamerican.com; (2009). Retrived:2 June 2012.